Gilani Mobility
Mobility Solutions Specialist

POOL ACCESSIBILITY



GILANI MONACO P150 POOL LIFT

Accessibility, Comfort and Confidence — Designed Into Every Detail

www.gilanimobility.ae

MONACO P150 POOL LIFT



The Gilani MONACO P150 is a mobile pool lift designed to provide safe, comfortable and controlled access to swimming pools. From smooth powered movement and supportive seating to carefully finished contact points and a contemporary GRP enclosure, the product is designed around both the user and the pool environment.

150 KG	24 V	MOBILE
MAX USER CAPACITY	REMOVABLE BATTERY	POOLSIDE DESIGN

ACCESSIBILITY
THAT BELONGS
BESIDE THE POOL



Accessible equipment should not make a carefully designed pool environment look clinical or industrial. The MONACO P150 was developed with appearance as part of the product — not as an afterthought.

Sculpted GRP Cover
A formed GRP enclosure conceals the internal mechanical structure and gives MONACO a clean, finished appearance.

Acrylic Detailing & Branding
Acrylic panels and integrated graphics provide visual refinement and a distinctive branded finish.

White Semi-Gloss Finish
A clean contemporary finish suited to hotels, resorts, wellness centres, private clubs and residential pool environments.

Poolside Construction
Hot-dip galvanized structural components with protective powder coating are combined with stainless-steel submerged components for poolside use.

DESIGNED AROUND THE USER

Pool accessibility is about more than simply moving a person into the water. The experience is shaped by every point the user touches.



FOLDABLE PADDED ARMRESTS:
Fold away for easier side access during transfer, while foam padding provides a softer and more comfortable contact surface.



COMFORTABLE HAND GRIPS:
Comfortable grips provide natural support points during transfer and movement.

WATER-DRAINING SEAT:
Integrated openings allow water to drain naturally from the seating surface, reducing water accumulation after use.

SUPPORTIVE FOOTREST:
Supports the user's feet throughout the lifting and lowering cycle for a more comfortable seated position.

SAFETY BELT:
Helps maintain a secure seating position while the lift is moving.

PROTECTED CONTACT AREAS:
Potential contact areas are finished without dangerous sharp edges. Protective nut caps cover exposed fasteners to reduce the risk of accidental cuts.



SMOOTH. CONTROLLED. SIMPLE.

STRAIGHTFORWARD CONTROLS AND PRACTICAL OPERATING DETAILS MAKE THE MONACO P150 EASIER TO MANAGE AROUND THE POOL.

SIMPLE UP / DOWN CONTROL
A handheld push-button controller provides straightforward operation without unnecessary complexity.

BRAKED WHEELS
Integrated wheel brakes allow the lift to be secured in position once correctly located for operation.

DEDICATED REMOTE HOLDER
The handheld controller can be returned to its dedicated holder, keeping it organised, accessible and off the pool deck.

EMERGENCY STOP
A dedicated emergency-stop button allows movement to be immediately interrupted when required.

NYLON PROTECTIVE ROLLER
Helps guide smooth operation while reducing scratching and hard contact between the lift and adjacent pool surfaces.

VISIBLE BATTERY PERCENTAGE
Operators can check the remaining battery level at a glance before operating the lift.



24 VOLTAGE REMOVABLE BATTERY
The battery can be removed for convenient charging away from the poolside.

POOL ACCESSIBILITY

Gilani Mobility
Mobility Solutions Specialist

SEAT POSITION UP

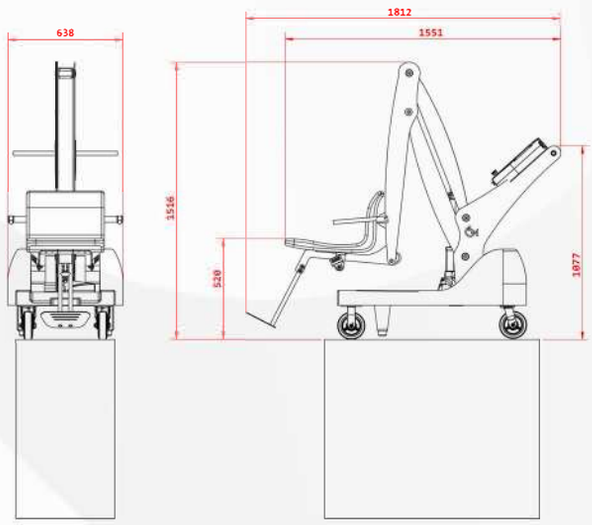

SEAT POSITION DOWN

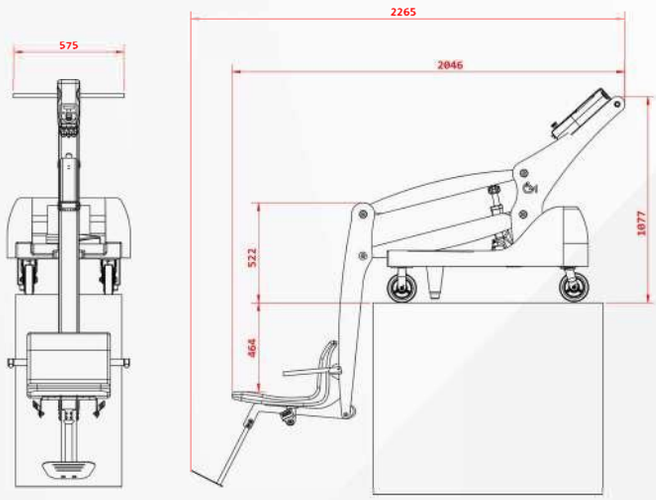

MONACO P150 - Technical Specifications

SPECIFICATION	MONACO P150
Maximum User Capacity	150 kg
Battery	24 V removable
Lift Weight	180 kg
Control System	IPX04 mobile push-button panel with spiral cable
Operation	Up / Down push-button control
Emergency Stop	Yes
Battery-Level Display	Yes
Foldable Armrests	Yes - padded
Footrest	Yes
Safety Belt	Yes
Wheel Brakes	Yes
External Battery Charger	Optional

THE DETAILS MAKE THE DIFFERENCE

The fold-away armrest. The soft contact surfaces. The drainage openings. The protected fasteners. The battery indicator. The controller holder. The nylon roller. The wheel brakes. MONACO P150 brings these small details together into one practical pool-access solution.

Thoughtful accessibility. Down to the smallest detail.